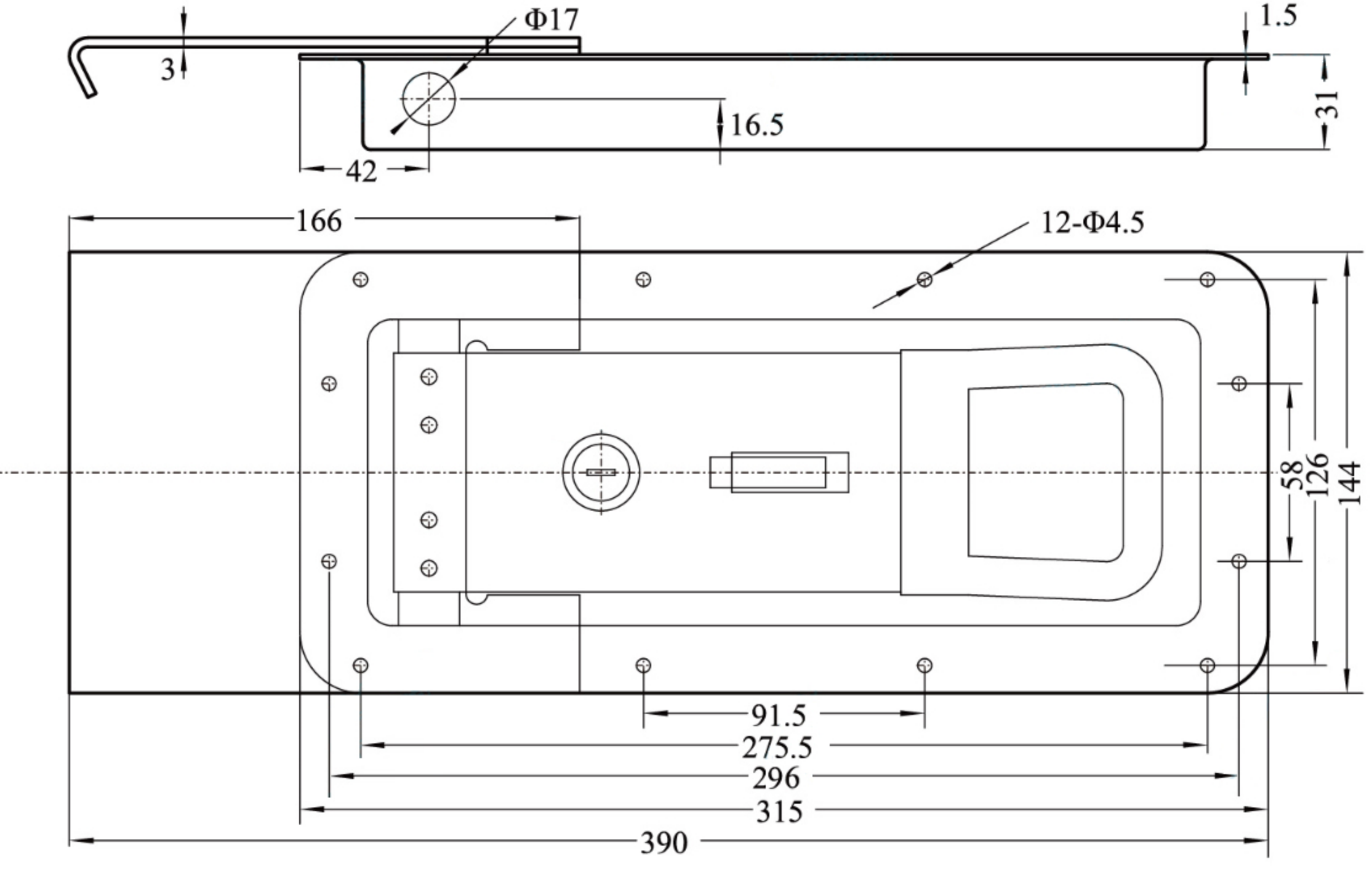
Φ17
1.5
3
31
16.5
42
166
12-Φ4.5
58
126
144
91.5
275.5
296
315
390